Three phase string inverter

ASW LT-G3 SERIES

User Manual

ASW25K-LT-G3 / ASW27K-LT-G3 / ASW30K-LT-G3
ASW33K-LT-G3 / ASW36K-LT-G3 / ASW40K-LT-G3

Solplanet

1 Notes on this Manual 4

1.1 General Notes 4

1.2 Area of Validity 4

1.3 Target group 5

1.4 Symbols used in this manual 6

2 Safety 7

2.1 Intended use 7

2.2 Important safety information 8

2.3 Symbols on the label 10

3 Unpacking 11

3.1 Scope of delivery 11

3.2 Check for transport damage 11

4 Mounting 12

4.1 Requirements for mounting 12

4.2 Mounting the inverter 16

5 Electrical connection 19

5.1 Safety 19

5.2 Electrical Connection Panel 20

5.3 Electrical connection diagram with a separate DC isolator 20

5.4 AC Connection 21

5.4.1 Conditions for the AC connection 21

5.4.2 Grid connection 24

5.4.3 Additional grounding connection 26

5.5 DC connection 27

5.5.1 Requirements for the DC connetion 27
5.5.2 Assembling the DC connectors 28
5.5.3 Disassembling the DC connectors 30
5.5.4 Connecting the PV Array 32
5.6 Conmunication equipment connection 34
5.6.1 Connect the communication line with RJ45 socket 34
5.6.2 Mounting the COM3: WiFi/4G 36
6 Communication 37
6.1 System monitoring via WLAN or 4G 37
6.2 Active power control with Smart meter 38
6.3 Remote firmware update 39
6.4 Active power control via demand response enabling device (DRED) 39
6.5 Communication with the third party device 40
6.6 Earth fault alarm 40
7 Commissioning 41
7.1 Electrical check 41
7.2 Mechanical check 42
7.3 Safety code check 42
7.4 Start-up 42
8 Display 44
8.1 Overview of the control panel 44
8.2 LED indicators 45
9 Disconnecting the inverter from voltage sources 46
10 Technical data 48
10.1 DC input data 48
10.2 AC output data 50

10.3 General data 52

10.4 Safety regulations 54

10.5 Tools and torque 55

11 Troubleshooting 56

12 Maintenance 59

12.1 Cleaning the contacts of the DC-switch 59

12.2 Cleaning the heat sink 59

13 Recycling and disposal 60

14 EU Declaration of Conformity 60

15 Warranty 60

16 Contact 61

1 Notes on this Manual

1.1 General Notes

ASW LT-G3 series inverter is a three-phase transformerless string inverter with three to three independent MPPTs. It converts the direct current (DC) generated by the photovoltaic (PV) module into a three-phase alternating current (AC) and feeds it into the utility grid.

1.2 Area of Validity

This manual describes the mounting, installation, commissioning and maintenance of the following inverters:

ASW40K-LT-G3

ASW36K-LT-G3

ASW33K-LT-G3

ASW30K-LT-G3

ASW27K-LT-G3

ASW25K-LT-G3

Please read this manual carefully before using this product, keep it in a convenient place and make it available at all times.

1.3 Target group

This document is for qualified electricians only, who must perform the tasks exactly as described.

All persons installing inverters must be trained and experienced in general safety which must be observed when working on electrical equipment. Installation personnel should also be familiar with local requirements, rules and regulations.

Qualified persons must have the following skills:

- Knowledge of how an inverter works and is operated.
- Training in how to deal with the dangers and risks associated with installing, repairing and using electrical devices and installations.
- Training in the installation and commissioning of electrical devices and installations.
- Knowledge of the applicable laws, standards and directives.
- Knowledge of and compliance with this document and all safety information.

1.4 Symbols used in this manual

Safety instructions will be highlighted with the following symbols:

⚠ DANGER

DANGER indicates a hazardous situation which, if not be avoided, will result in death or serious injury.

⚠ WARNING

WARNING indicates a hazardous situation which, if not be avoided, can result in death or serious injury.

⚠ CAUTION

CAUTION indicates a hazardous situation which, if not be avoided, can result in minor or moderate injury.

NOTICE

NOTICE indicates a situation which, if not be avoided, can result in property damage.

ℹ

INFORMATION that is important for a specific topic or goal, but is not safety-relevant.

2 Safety

2.1 Intended use

1. ASW LT-G3 series inverter converts the direct current from the PV arrays into grid-compliant alternating current.
2. ASW LT-G3 series inverter is suitable for indoor and outdoor use.
3. ASW LT-G3 series inverter must only be operated with PV arrays (PV modules and cabling) of protection class II in accordance with IEC 61730, application class A. Do not connect any sources of energy other than PV modules to ASW LT-G3 series inverter.
4. PV modules with a high capacity to ground must only be used if their coupling capacity does not exceed 5.0μF.
5. When the PV modules are exposed to light, a DC voltage is supplied to this inverter.
6. When designing the PV power plants, ensure that the values comply with the permitted operating range of all components at all time.
7. The product must only be used in countries for which it is approved or released by Solplanet and the grid operator.
8. Use this product only in accordance with the information provided in this documentation and with the locally applicable standards and directives. Any other application may cause personal injury or property damage.
9. The type label must remain permanently attached to the product.

DANGER

Danger to life due to electric shock when live components or cables are touched.

- All work on the inverter must only be carried out by qualified personnel who have read and fully understood all safety information contained in this manual.
- Do not open the inverter.
- Children must be supervised to ensure that they do not play with the inverter.

DANGER

Danger to life due to high voltages of the PV array.

When exposed to sunlight, the PV array generates dangerous DC voltage which is present in the DC conductors and the live components of the inverter. Touching the DC conductors or the live components can lead to lethal electric shocks. If you disconnect the DC connectors from the inverter under load, an electric arc may occur leading to electric shock and burns.

- Do not touch non-insulated cable ends.
- Do not touch the DC conductors.
- Do not touch any live components of the inverter.
- Have the inverter mounted, installed and commissioned only by qualified persons with the appropriate skills.
- If an error occurs, have it rectified by qualified persons only.
- Prior to performing any work on the inverter, disconnect it from all voltage sources as described in this document (see Section 9 “Disconnecting the inverter from voltage sources”).

⚠ WARNING

Risk of injury due to electric shock.

Touching an ungrounded PV module or array frame can cause a lethal electric shock.

- Connect and ground the PV modules, array frame and electrically conductive surfaces so that there is continuous conduction.

⚠ CAUTION

Risk of burns due to hot enclosure parts.

Some parts of the enclosure can get hot during operation.

- During operation, do not touch any parts other than the enclosure lid of the inverter.

NOTICE

Damage to the inverter due to electrostatic discharge.

Internal components of the inverter can be irreparably damaged by electrostatic discharge.

- Ground yourself before touching any component.

2.3 Symbols on the label

Symbol	Explanation
	Beware of a danger zone This symbol indicates that the inverter must be additionally grounded if additional grounding or equipotential bonding is required at the installation site.
	Beware of high voltage and operating current The inverter operates at high voltage and current. Work on the inverter must only be carried out by skilled and authorized electricians.
	Beware of hot surfaces The inverter can get hot during operation. Avoid contact during operation.
	WEEE designation Do not dispose of the inverter together with the household waste but in accordance with the disposal regulations for electronic waste applicable at the installation site.
	CE marking The product complies with the requirements of the applicable EU directives.
	Certification mark The product has been tested by TUV and got the quality certification mark.
	RCM Mark The product complies with the requirements of the applicable Australian standards.
25mins	Capacitors discharge Before opening the covers, the inverter must be disconnected from the grid and PV array. Wait at least 25 minutes to allow the energy storage capacitors to fully discharge.
	Observe the documentation Observe all documentation supplied with the product.

3 Unpacking

3.1 Scope of delivery

Object	Description	Quantity
A	Inverter	1 piece
B	Wall mounting bracket	1 piece
C	DC connector	2 pieces
D	Screw accessory	1 piece
E	AC connector	1 piece
F	4G/ WiFi Stick (optional)	1 piece（optional）
G	RS485 communication terminal	1 piece（optional）
H	Documentation	1 piece

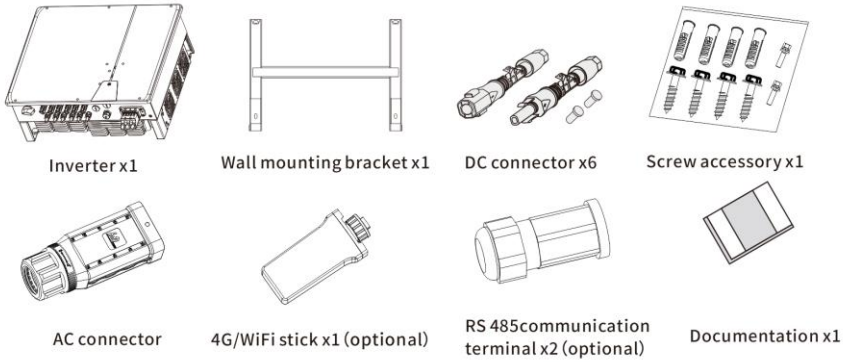

Please carefully check all the components in the carton. If anything is missing, contact your dealer at once.

3.2 Check for transport damage

Thoroughly inspect the packaging upon delivery. If you detect any damage to the packaging which indicates the inverter may have been damaged, inform the responsible shipping company immediately. We will be glad to assist you if required.

4.1 Requirements for mounting

DANGER

Danger to life due to fire or explosion.

Despite careful construction, electrical devices can cause fires.

- Do not mount the inverter on flammable construction materials.
- Do not mount the inverter in areas where flammable materials are stored.
- Do not mount the inverter in areas where there is a risk of explosion.

1. Be sure that the inverter is mounted out of the reach of children.
2. Mount the inverter in areas where it cannot be touched inadvertently.
3. Ensure good access to the inverter for installation and possible service.
4. The ambient temperature should be below 40°C to ensure optimal operation.
5. Observe the minimum clearances to walls, other inverters, or objects as follows to ensure sufficient heat dissipation.

Direction	Min. clearance (mm)
above	500
below	500
sides	500

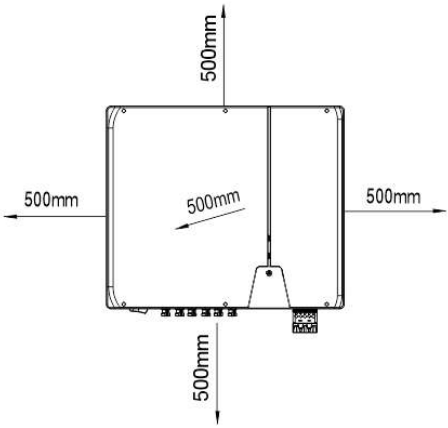

Clearances for one inverter

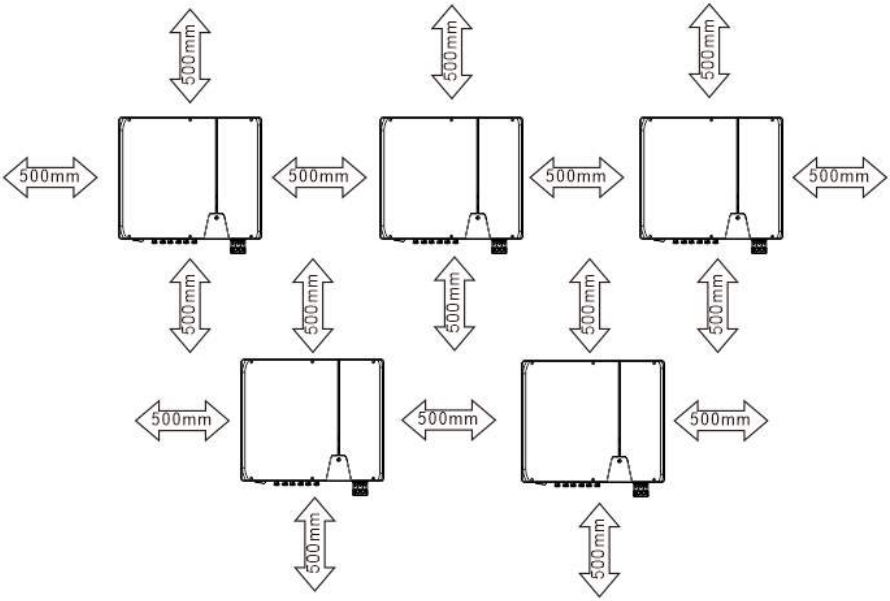

Clearances for multiple inverters

6. In order to avoid power reduction caused by overheating, do not mount the inverter in a location that allows long-term exposure to direct sunlight.
7. Ensure optimum operation and extend service life, avoid exposing the inverter to direct sunlight, rain and snow.

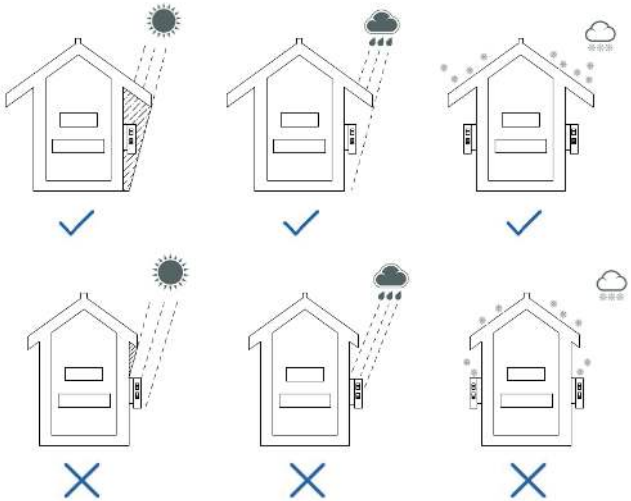

8. The mounting method, location and surface must be suitable for the inverter's weight and dimensions.
9. If mounted in a residential area, we recommend mounting the inverter on a solid surface. Plasterboard and similar materials are not recommended due to audible vibrations when in use.
10. Don't put any objects on the inverter. Do not cover the inverter.
11. Mount the inverter vertically or tilted backward by max.15°.

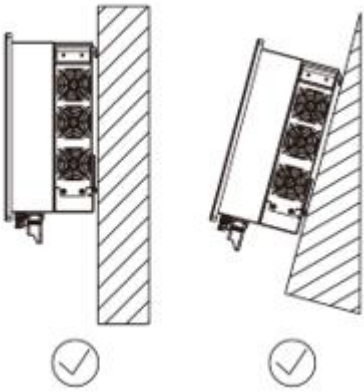

12. Never install the inverter horizontally, or with a forward tilt or with a backward tilt or even with upside down. The horizontal installation can result in damage to the inverter.

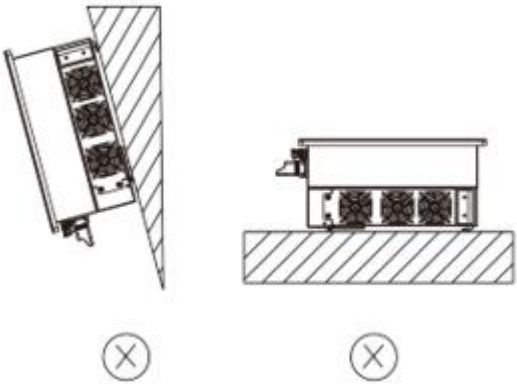

13. Mount the inverter at eye level for easy inspection.

CAUTION

Risk of injury when lifting the inverter, or if it is dropped.

The weight of Solplanet inverter is max. 43 kg. There is risk of injury if the inverter is lifted incorrectly or dropped while being transported or when attaching it to or removing it from the wall bracket.

- Transport and lift the inverter carefully.

Mounting procedure:

CAUTION

Risk of injury due to damaged cables.

There may be power cables or other supply lines (e.g. gas or water) routed in the wall.

- Ensure that no lines are laid in the wall which could be damaged when drilling holes.

1. Use a Φ10mm bit to drill 3 holes at a depth of about 70mm according to the location of the wall mounting bracket

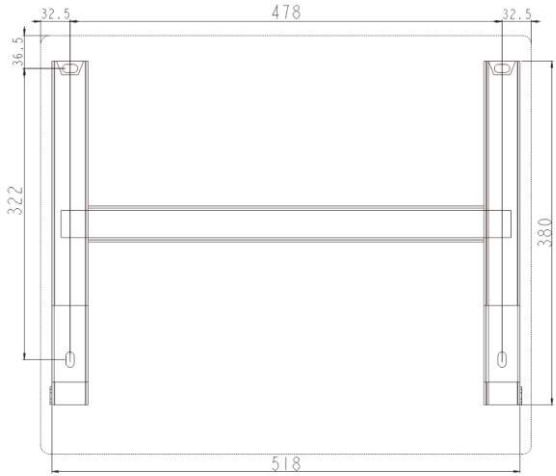

CAUTION

Risk of injury due to the product falls down.

If the depth and distance of the holes is not correct, the product maybe fall down from the wall.

- Before inserting the wall anchors, measure the depth and distance of the holes.

2. Insert three wall plugs into the wall and fix the mounting bracket to the wall by inserting three Screws (SW10).

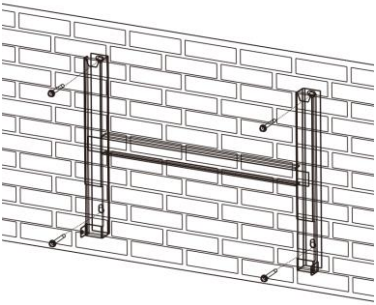

3. Hang the slot on the back of the inverter to the hook on the top of the mounting bracket.

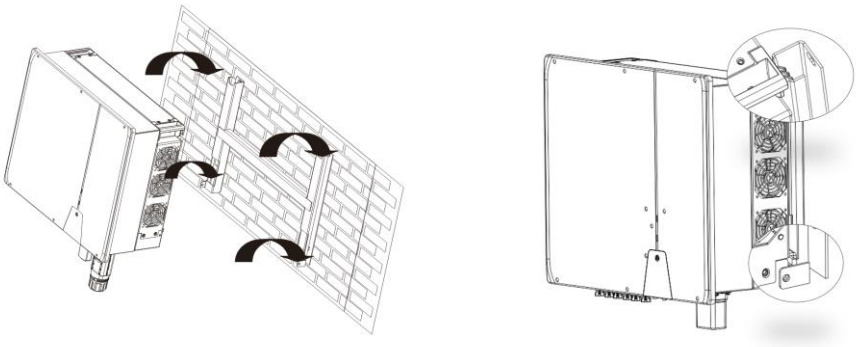

4. Secure the inverter to the mounting bracket on both sides using two M5 screws.

Screwdriver type: PH2, torque: 2.5Nm.

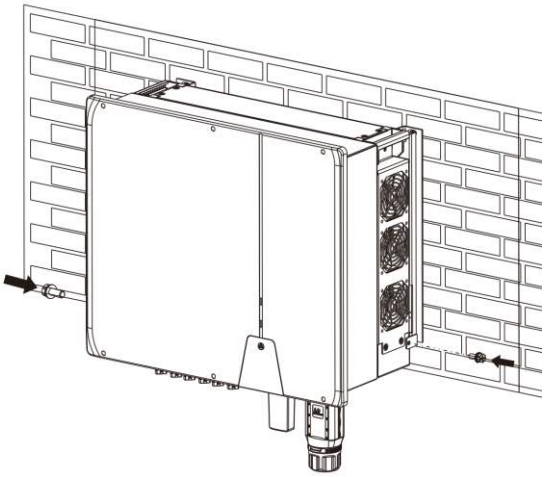

Dismante the inverter in reverse order.

5.1 Safety

DANGER

Danger to life due to high voltages of the PV array.

When exposed to sunlight, the PV array generates dangerous DC voltage which is present in the DC conductors and the live components of the inverter. Touching the DC conductors or the live components can lead to lethal electric shocks. If you disconnect the DC connectors from the inverter under load, an electric arc may occur leading to electric shock and burns.

- Do not touch non-insulated cable ends.
- Do not touch the DC conductors.
- Do not touch any live components of the inverter.
- Have the inverter mounted, installed and commissioned only by qualified persons with the appropriate skills.
- If an error occurs, have it rectified by qualified persons only.
- Prior to performing any work on the inverter, disconnect it from all voltage sources as described in chapter 9.

WARNING

Risk of injury due to electric shock.

Touching an ungrounded PV module or array frame can cause a lethal electric shock.

- connect and ground the PV modules, array frame and electrically conductive surfaces so that there is continuous conduction.

5.2 Electrical Connection Panel

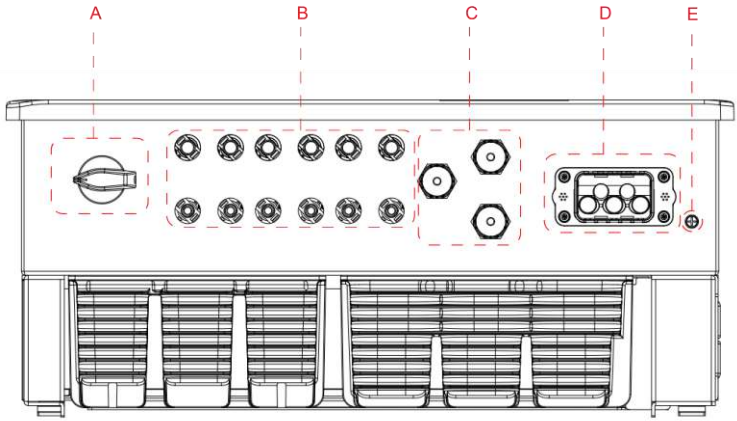

Object	Description
A	DC-switch
B	MPP connector
C	Communication interface(COM1 & COM2 are optional)
D	AC terminal
E	Additional grounding

5.3 Electrical connection diagram with a separate DC isolator

Local standards or codes may require that a separate DC isolator should be installed next to the inverter. The separate DC isolator must disconnect each PV string of the inverter so that the entire inverter can be removed if the inverter is faulty. We recommend the following electrical connection:

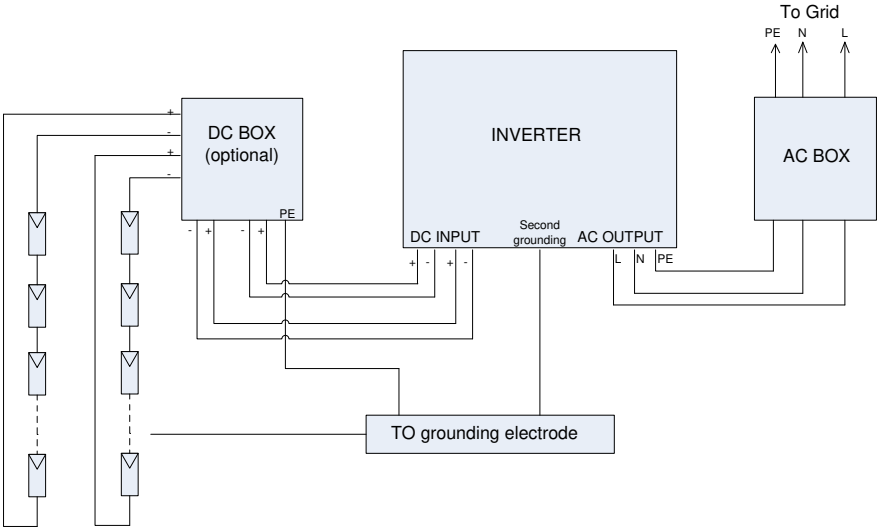

5.4 AC Connection

5.4.1 Conditions for the AC connection

Cable Requirements

The grid connection is made using 5 conductors (L1, L2, L3, N, and PE). We recommend the following requirements for stranded copper conductor.

1. YJV or YJVR copper cable is recommended.
2. If using aluminum wire, please contact our service department.

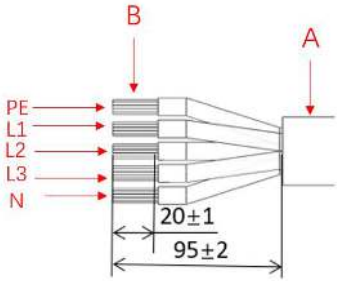

Object	Description	Value
A	External diameter	20…36 mm
B	Copper Conductor cross-section	10…25 mm^2
Note: If use aluminuim conductor please connect our service department.		

Cable Design

The conductor cross-section should be dimensioned to avoid power loss in cables exceeding 1% of rated output power.

The required conductor cross-section depends on the inverter rating, ambient temperature, routing method, cable type, cable losses, valid installation requirements of installation side.

Residual current protection

The product is equipped with an integrated universal current-sensitive residual current monitoring unit inside. The inverter will disconnect immediately from the mains power as soon as fault current with a value exceeding the limit.

> ℹ
>
> If an external residual-current protection device is required, please install a type B residual-current protection device with a protection limit of not less than 300mA.

Overvoltage category

The inverter can be used in grids of overvoltage category III or lower in accordance with IEC 60664-1. This means that it can be permanently connected at the grid-connection point in a building. In installations involving long outdoor cable routing, additional measures to reduce overvoltage category IV to overvoltage category III are required.

AC circuit breaker

In PV systems with multiple inverters, protect each inverter with a separate circuit breaker. This will prevent residual voltage being present at the corresponding cable after disconnection.

No consumer load should be applied between AC circuit breaker and the inverter.

The selection of the AC circuit breaker rating depends on the wiring design (wire cross-section area), cable type, wiring method, ambient temperature, inverter current rating, etc. Derating of the AC circuit breaker rating may be necessary due to self-heating or if exposed to heat.

The maximum output current and the maximum output overcurrent protection of the inverters can be found in section 10 “Technical data” .

Grounding conductor monitoring

The inverter is equipped with a grounding conductor monitoring device. This grounding conductor monitoring device detects when there is no grounding conductor connected and disconnects the inverter from the utility grid if this is the case. Depending on the installation site and grid configuration, it may be advisable to deactivate the grounding conductor monitoring. This is necessary, for example, in an IT system if there is no neutral conductor present and you intend to install the inverter between two line conductors. If you are uncertain about this, contact your grid operator or Solplanet .

Safety in accordance with IEC 62109 when the grounding conductor monitoring is deactivated.

In order to guarantee safety in accordance with IEC 62109 when the grounding conductor monitoring is deactivated, carry out one of the following measures:

- Connect a copper-wire grounding conductor with a cross-section of at least 10 mm² to the AC connector bush insert.
- Connect an additional grounding that has at least the same cross-section as the connected grounding conductor to the AC connector bush insert. This prevents touch current in the event of the grounding conductor on the AC connector bush insert failing.

5.4.2 Grid connection

Procedure:

DANGER

Danger to life due to high voltages in the inverter.

Touching the live components can lead to lethal electric shocks.

- Before performing the electrical connection, ensure that the AC circuit-breaker is switched off and cannot be reactivated.

1. Switch off the AC circuit breaker and secure it against reconnection.
2. Insert the copper wire into a suitable terminal and crimp it.

NOTICE

Damage to the inverter due to wrong wiring.

If the phase line was connected to PE terminal, the inverter will not function properly.

- Please ensure that the type of the conductors matches the signs of the terminals on the socket element.

3. Thread the stripped wire into the lock nut and the main body in turn (the flexible wire needs to be riveted to the insulated terminal). Insert the cable into the rubber core according to the line sequence, make the insulating terminal flush with the rubber core surface, and the torque of the crimping screwdriver is 5.0 ± 0.1N. m

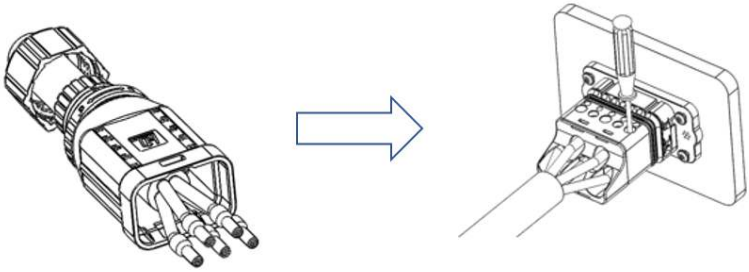

4. Insert the main body into the rubber core and hear the “click” sound.

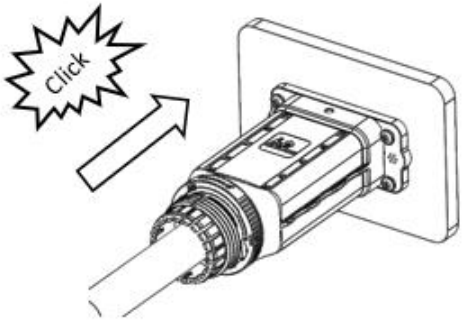

5. Tighten the nut with an open-ended wrench and complete the installation with a “click, click, click”, then complete the installation.

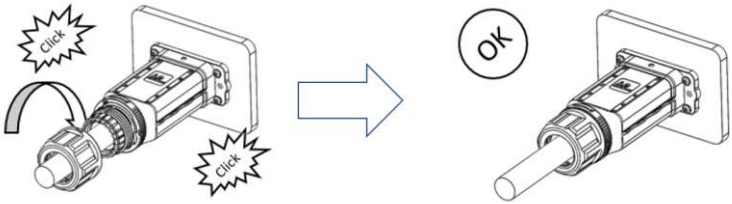

5.4.3 Additional grounding connection

If additional grounding or equipotential bonding is required locally, you can connect additional grounding to the inverter. This prevents touch current if the grounding conductor on the AC connector fails.

Procedure:

1. Align the terminal lug with protective conductor.
2. Insert the screw through the hole located at the housing and tighten it firmly (screw driver type: PH2, torque: 2.5Nm).

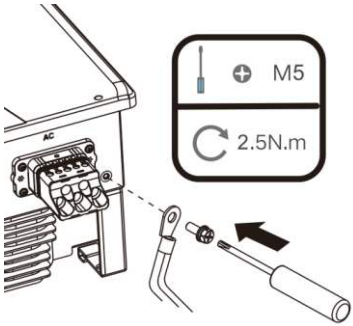

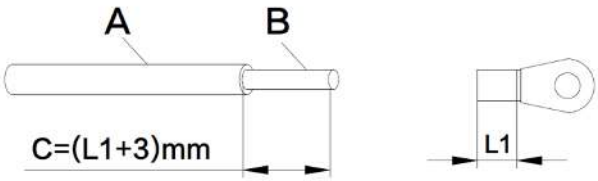

Grounding parts information：

Object	Explanation
1	M5 screw
2	M5 OT terminal
3	Yellow-green grounding wire

5.5 DC connection

DANGER

Danger to life due to high voltages in the inverter.

Touching the live components can lead to lethal electric shocks.

- Before connecting the PV generator, ensure that the DC-switch is switched off and that it cannot be reactivated.
- Do not disconnect the DC connectors under load.

5.5.1 Requirements for the DC connetion

Requirements for the PV modules of a string:

1. PV modules of the connected string must be the same type, Identical alignment and Identical tilt.
2. The thresholds for the input voltage and the input current of the inverter must be adhered to (see Section 10.1 “DC input data”).

3. On the coldest day based on statistical records, the open-circuit voltage of the PV array must never exceed the maximum input voltage of the inverter.
4. The connection cables of the PV modules must be provided with the connectors
5. The positive connection cables of the PV modules must be fitted with the positive DC connectors. The negative connection cables of the PV modules must be provided with the negative DC connectors.

5.5.2 Assembling the DC connectors

DANGER

Danger to life due to high voltages on DC conductors.

When exposed to sunlight, the PV array generates dangerous DC voltage which is present in the DC conductors. Touching the DC conductors can lead to lethal electric shocks.

- Cover the PV modules.
- Do not touch the DC conductors.

Assemble the DC connectors as described below. Be sure to observe the correct polarity. The DC connectors are marked with the symbols “+” and “ – ”.

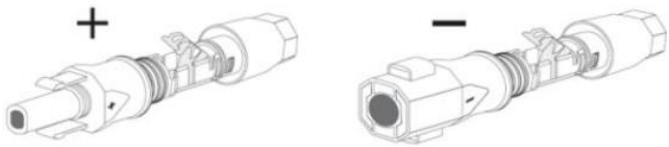

Cable requirements:

The cable must be of type PV1-F, UL-ZKLA or USE2 and comply with the following properties:

1. External diameter: 5-8mm
2. Conductor cross-section: 2.5-6mm²
3. Qty single wires: minimum 7
4. Nominal voltage: minimum 1100V

Procedure:

1. Strip about 12 mm of the cable insulation.

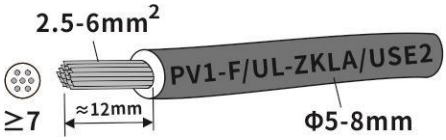

2. Route the stripped cable all the way into the DC connector. Ensure that the stripped cable and the DC connector have the same polarity.

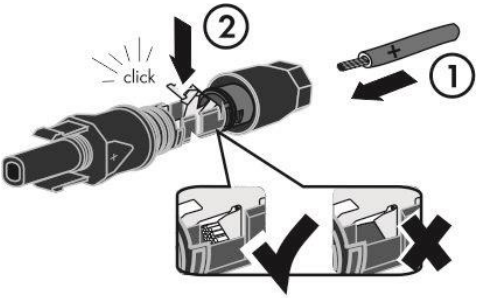

3. Push the swivel nut up to the thread and tighten the swivel nut. (SW15, Torque: 2.0Nm).

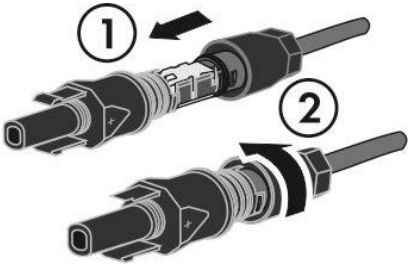

5.5.3 Disassembling the DC connectors

DANGER

Danger to life due to high voltages on DC conductors.

When exposed to sunlight, the PV array generates dangerous DC voltage which is present in the DC conductors. Touching the DC conductors can lead to lethal electric shocks.

- Cover the PV modules.
- Do not touch the DC conductors.

Procedure:

1. Make sure DC power is cut off.
2. Unscrew the swivel nut.

3. To release the DC connector, insert a flat-blade screwdriver (blade width: 3.5 mm) into the side catch mechanism and lever open.

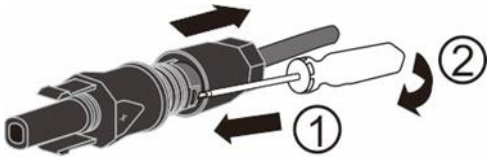

4. Carefully pull the DC connector apart.
5. Release the clamping bracket. To do so, insert a flat-blade screwdriver (blade width: 3.5 mm) into the clamping bracket and lever it open.

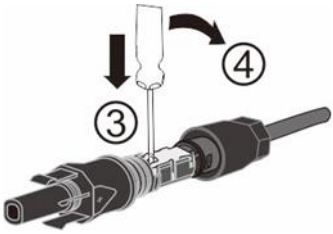

6. Remove the cable.

5.5.4 Connecting the PV Array

NOTICE

Destruction of the inverter due to overvoltage.

If the voltage of the strings exceeds the maximum DC input voltage of the inverter, it can be destroyed due to overvoltage. All warranty claims become void.

- Do not connect strings with an open-circuit voltage greater than the maximum DC input voltage of the inverter.
- Check the design of the PV system .

Procedure:

1. Ensure that the individual AC circuit breaker is switched off and secure it against reconnection.
2. Ensure that the DC-switch is switched off and secure it against reconnection.
3. Ensure that there is no ground fault in the PV strings.
4. Check whether the DC connector has the correct polarity. If the DC connector fits with a DC cable having the wrong polarity, the DC connector must be reassembled again. The DC cable must always have the same polarity as the DC connector.
5. Ensure that the open-circuit voltage of the PV strings does not exceed the maximum DC input voltage of the inverter.
6. Unplug the sealing plug on the input end of the DC connector and connect the assembled DC connectors to the inverter until they audibly snap into place. Do not unplug the sealing plug from the input end of unused DC connector.

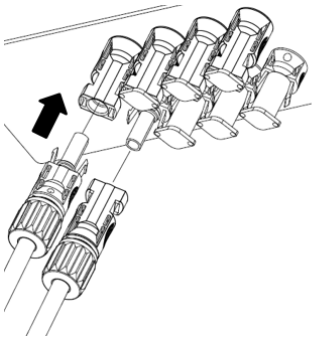

NOTICE

Damage to the inverter due to moisture and dust penetration.

Seal the unused DC inputs with sealing plugs so that moisture and dust cannot penetrate the Inverter.

- Make sure all DC connectors are securely sealed.

5.6 Conmunication equipment connection

5.6.1 Connect the communication line with RJ45 socket

NOTICE

Damage to the inverter due to electrostatic discharge.

Internal components of the inverter can be irreparably damaged by electrostatic discharge.

- Ground yourself before touching any component.

NOTICE

The inverter can be destroyed by wrong communication wiring.

- Internal components of the inverter can be irreparably damaged due to incorrect wiring between the power wire and signal wire. All the warranty claim will be invalid.
- Please check the wiring of the RJ45 connector before crimping the contact.

RS485 cable pin assignment as below, strip the wire as shown in the figure, and crimp the copper wire to the appropriate OT terminal (according to DIN 46228-4, provided by the customer).

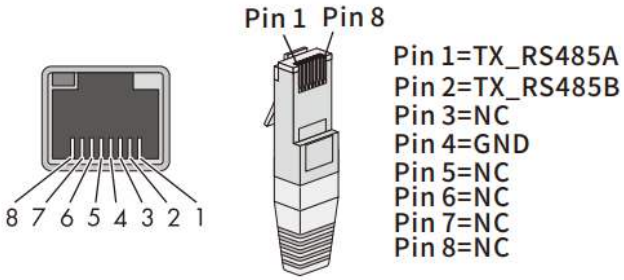

Procedure:

1. Unscrew the communication port cover cap in the following arrow sequence and insert the network cable into the RS485 communication client attached.
2. Insert the network cable into the corresponding communication terminal of the machine according to the arrow sequence, tighten the thread sleeve, and then tighten the forcing nut at the tail.

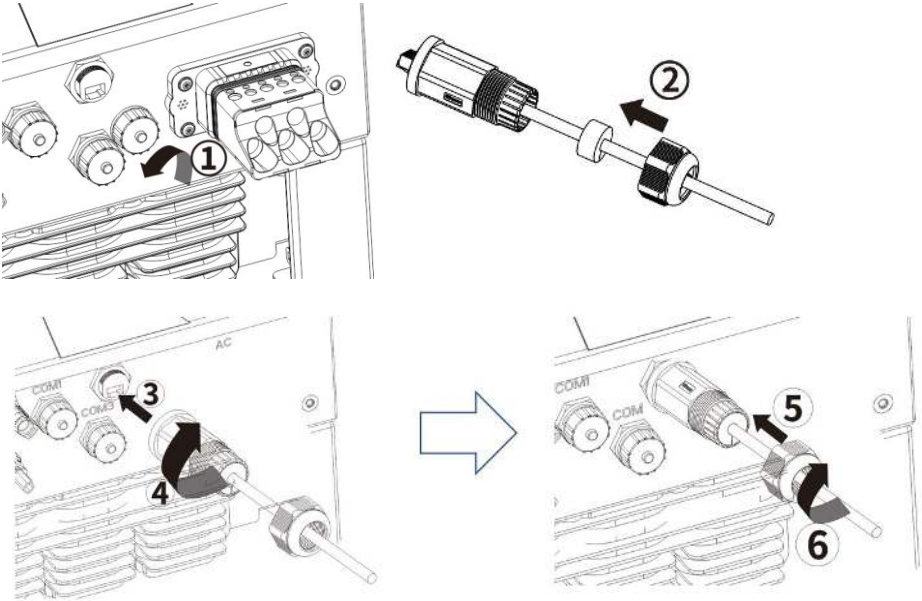

5.6.2 Mounting the COM3: WiFi/4G

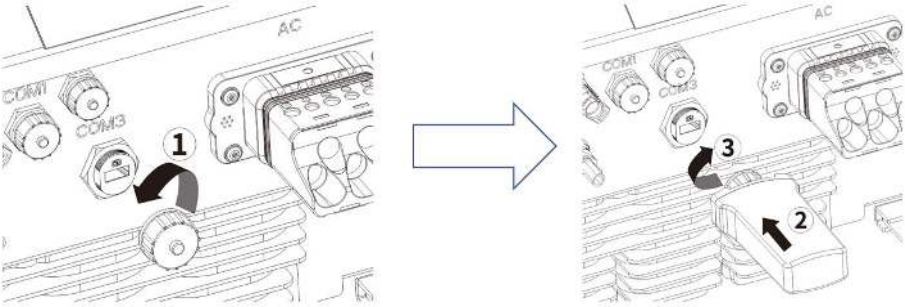

The communication stick interface COM3 is only applicable to Solplanet products and can not be connected to any other USB devices.

6 Communication

6.1 System monitoring via WLAN or 4G

User can monitor the inverter through the external 4G/WiFi stick module. The connection diagram between the inverter and internet is shown as following two pictures, both two methods are available. Please note that each 4G/WiFi stick can only connect to 5 inverters in method1.

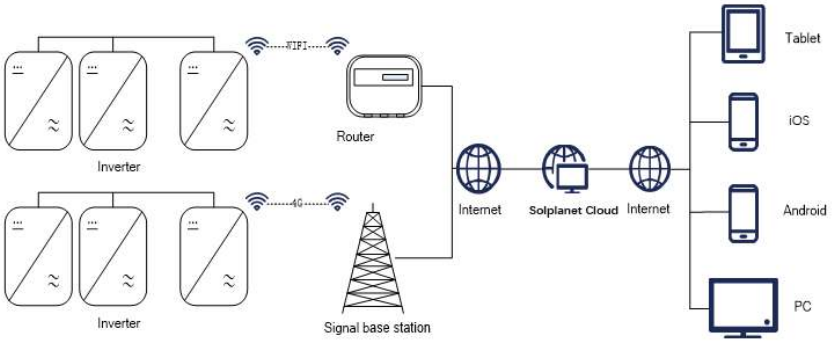

Method 1 only one inverter with the 4G/WiFi Stick, the other inverter be connected through the RS 485 cable.

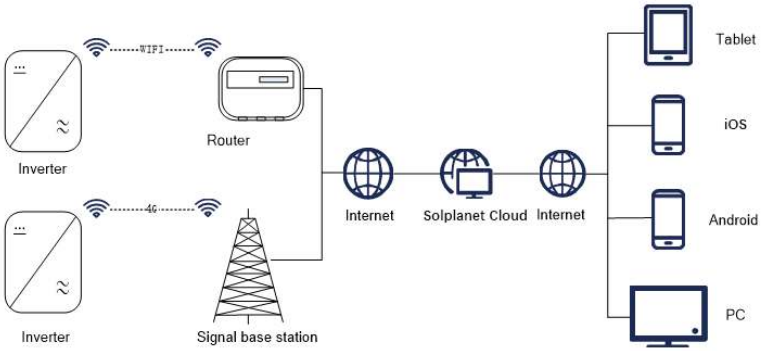

Mehod 2 every inverter with 4G/WiFi Stick, every inverter can connect to internet.

As shown above, we offer a remote monitoring platform called “Solplanet cloud”. You can also install the “Solplanet APP” on a smart phone using Android or an iOS operating system. You can

visit the website (https://solplanet.net/installer-area/#monitoring)for system information. And download the user manual for the Solplanet Cloud Web or Solplanet APP.

6.2 Active power control with Smart meter

The inverter can control activepower output via connecting smart meter, following picture is the system connection mode through WiFi stick.

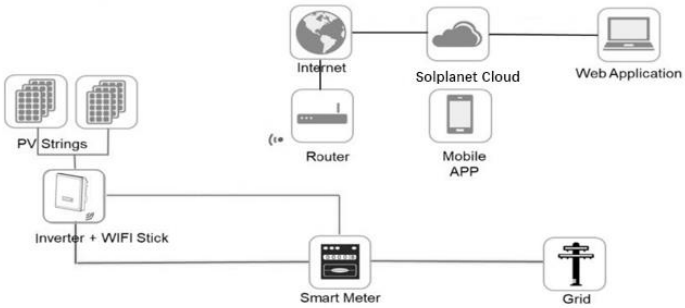

The smart meter should support the MODBUS protocol with a baud rate of 9600 and address set 1. Smart meter as above SDM630-Modbus connecting method and seting baud rate method for modbus please refer to it's user manual.

Possible reason of communication failure due to incorrect connection.

- WiFi stick only support single inverter to do active power control.
- The overall length of the cable from inverter to smart meter is 100m.

The active power limit can be set on "Solplanet APP" application, the details can be found in the user manual for the Solplanet APP.

6.3 Remote firmware update

ASW LT-G3 series inverters can update the firmware through 4G/WiFi stick, no need to open the cover for maintenance. For more information, please contact the Service.

6.4 Active power control via demand response enabling device (DRED)

DRMs application description.

- Only applicable to AS/NZS4777.2:2015.
- DRM0, DRM5, DRM6, DRM7, DRM8 are available.

The inverter shall detect and initiate a response to all supported demand response commands, demand response modes are described as follows:

Mode	Requirement
DRM 0	Operate the disconnection device
DRM 1	Do not consume power
DRM 2	Do not consume at more than 50% of rated power
DRM 3	Do not consume at more than 75% of rated power AND Source reactive power if capable
DRM 4	Increase power consumption (subject to constraints from other active DRMs)
DRM 5	Do not generate power
DRM 6	Do not generate at more than 50% of rated power
DRM 7	Do not generate at more than 75% of rated power AND Sink reactive power if capable
DRM 8	Increase power generation (subject to constraints from other active DRMs)

If DRMs support is required, the inverter should be used in conjunction with AiCom.

The Demand Response Enabling Device (DRED) can be conneted to the DRED port on AiCom via RS485 cable. You can vist the website www.solplanet.net for more information and download the user manual for the AiCom.

6.5 Communication with the third party device

Solplanet inverters can also connect with one third party device instead of RS485 or WiFi stick, the communication protocol is modbus. For more information, please contact the Service.

6.6 Earth fault alarm

This inverter complies with IEC 62109-2 clause 13.9 for earth fault alarm monitoring. If an Earth Fault Alarm occurs, the red color LED indicator will light up. At the same time, the error code 38 will be sent to the Solplanet Cloud. (This function is only available in Australia and New Zealand).

7.1 Electrical check

Carry out the main electrical checks as follows:

1. Check the PE connection with a multimeter: check that the inverter's exposed metal surface has a grounding connection.

> **WARNING**
>
> **Danger to life due to the presence of DC-Voltage.**
>
> Touching the live conductors can lead to lethal electric shocks.
>
> - Only touch the insulation of the PV array cables.
> - Do not touch parts of the sub-structure and frame of the PV array which isn't grouned.
> - Wear personal protective equipment such as insulating gloves.

2. Check the DC voltage values: make sure that the DC voltage of the strings does not exceed the permitted limits.
3. Check the polarity of the DC voltage: make sure the DC voltage has the correct polarity.
4. Check the PV generator's insulation to ground with a multimeter: make sure that insulation resistance to ground is greater than 1MOhm.

> **WARNING**
>
> **Danger to life due to the presence of AC-Voltage.**
>
> Touching the live conductors can lead to lethal electric shocks.
>
> - Only touch the insulation of the AC cables.
> - Wear personal protective equipment such as insulating gloves.

5. Check the grid voltage: check that the grid voltage at the point of connection of the inverter is within the permitted range.

7.2 Mechanical check

Carry out the main mechanical checks to ensure the inverter is waterproof as follows:

1. Make sure the inverter has been correctly mounted with wall bracket.
2. Make sure the cover has been correctly mounted.
3. Make sure the communication cable and AC connector have been correctly wired and tightened.

7.3 Safety code check

Choose suitable safety code according to the location of installation. please visit website (https://solplanet.net/installer-area/#monitoring) and download the Solplanet APP manual for detailed information, you can find the Safety Code Setting Guide in an event where an installer needs to set the country code manually.

> i
>
> The Solplanet's inverters comply with local safety code when leaving the factory.

7.4 Start-up

After finishing the electrical and mechanical checks, switch on the miniature circuit-breaker and DC-switch in turn. Once the DC input voltage is sufficiently high and the grid-connection conditions are met, the inverter will start operation automatically. Usually, there are three states during operation:

1. Waiting: When the initial voltage of the strings is greater than the minimum DC input voltage but lower than the start-up DC input voltage, the inverter is waiting for sufficient DC input voltage and cannot feed power into the grid.
2. Checking: When the initial voltage of the strings exceeds the start-up DC input voltage, the inverter will check feeding conditions at once. If there is anything wrong during

checking, the inverter will switch to the “Fault” mode.

3. Normal: After checking, the inverter will switch to “Normal” state and feed power into the grid.

During periods of low radiation, the inverter may continuously start up and shut down. This is due to insufficient power generated by the PV array.

If this fault occurs often, please call service.

> i
>
> If the inverter is in “Fault” mode, refer to chapter 11 “Troubleshooting”.

8 Display

8.1 Overview of the control panel

The inverter is equipped with a display panel, which has 3 LED indicators.

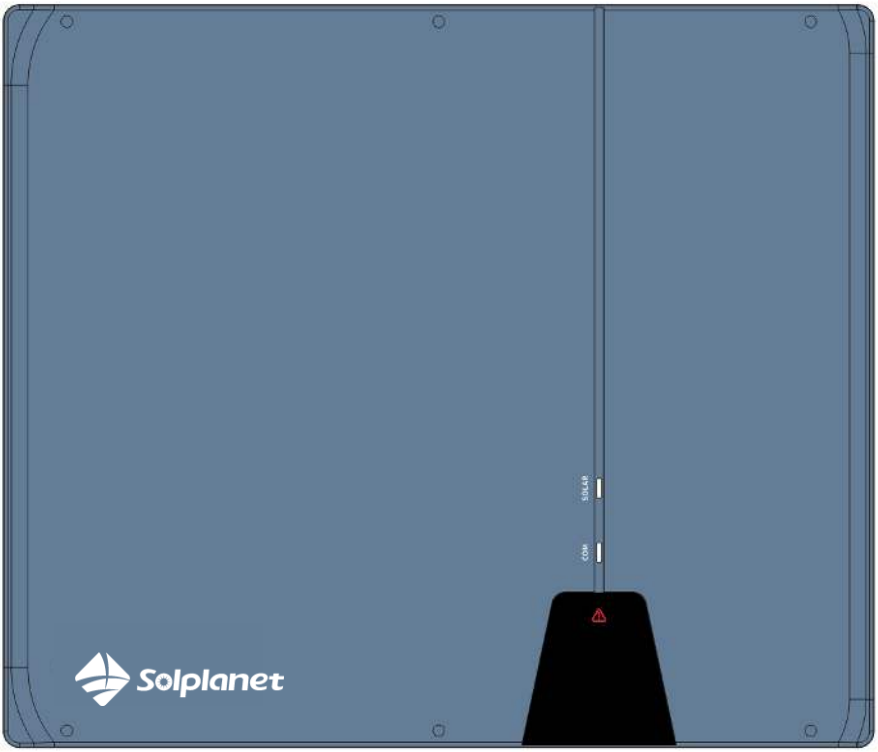

8.2 LED indicators

The three LED indicators from top to bottom are:

1. SOLAR power indicator

When the inverter is in the standby self-checking state, the white light flashes. Under normal grid-connected working state, the light is always on. In “Fault” mode, the light is off.

2. COM communication indicator

When the inverter communicates with other devices normally, the white light flashes. If communication is abnormal or not connected, the light is off.

3. Fault indicator

The light is on when the invert is faulty or when external conditions cannot be grid-connected or when it is working improperly. When there is no fault, the light is off.

Before performing any work on the inverter, disconnect it from all voltage sources as described in this section. Always adhere strictly to the given sequence.

1. Disconnect AC circuit breaker and secure against reconnection.
2. Disconnect the DC-switch and secure against reconnection.
3. Use a current probe to ensure that no current is present in the DC cables.

DANGER

Danger to life due to electric shock when touching exposed DC conductors or DC plug contacts if the DC connectors are damaged or loose.

The DC connectors can break or become damaged, become free of the DC cables, or no longer be connected correctly if the DC connectors are released and disconnected incorrectly. This can result in the DC conductors or DC plug contacts being exposed. Touching live DC conductors or DC plug connectors will result in death or serious injury due to electric shock.

- Wear insulated gloves and use insulated tools when working on the DC connectors.
- Ensure that the DC connectors are in perfect condition and that none of the DC conductors or DC plug contacts are exposed.
- Carefully release and remove the DC connectors as described in the following.

4. Release and remove all DC connectors. Insert a flat-blade screwdriver or an angled screwdriver (blade width: 3.5 mm) into one of the slide slots and pull the DC connectors out downwards. Do not pull on the cable.

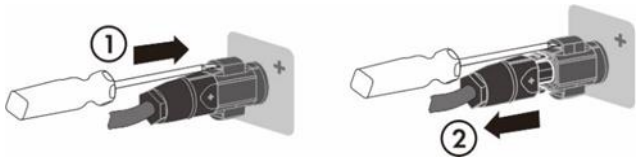

5. Release and disconnect the AC connector. Unscrew the screws of the AC terminals, and then pull out the AC connector.

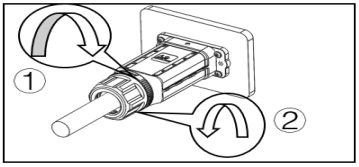

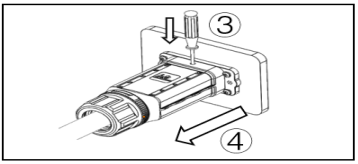

6. Wait until all LEDs and the display have gone out.

10.1 DC input data

Type	ASW25K-LT-G3	ASW27K-LT-G3	ASW30K-LT-G3
Max. PV modules ower(STC)	37500 W	40500 W	45000 W
Max. input voltage/ Rated input voltage	1100V/630V		
MPP voltage range	180 - 1000 V		
Full load MPP voltage range	450 V - 850 V		
Intitial feed-in voltage	160 V		
Min input voltage	200 V		
Max. DC input current	32A / 32 A / 32A		
I_{sc} PV, absolute max.	48A / 48A / 48A		
Maximum reverse current from the inverter in the system for max. 1 ms	0 A		
Number of MPP trackers	3		
Strings per MPP tracker	2		
Overvoltage category in accordance with IEC60664-1	II		

Type	ASW33K-LT-G3	ASW36K-LT-G3	ASW40K-LT-G3
Max. PV modules ower(STC)	49500 W	54000 W	60000 W
Max. input voltage/ Rated input voltage	1100V/630V		
MPP voltage range	180 - 1000 V		
Full load MPP voltage range	450 V - 850 V		
Intitial feed-in voltage	160 V		
Min input voltage	200 V		
Max. DC input current	32A / 32A / 40A		
Isc PV, absolute max.	48A / 48A / 60A		
Maximum reverse current from the inverter in the system for max. 1 ms	0 A		
Number of MPP trackers	3		
Strings per MPP tracker	2		
Overvoltage category in accordance with IEC60664-1	II		

1. When the DC input voltage is greater than 1070V, the inverter will alarm an error.
2. When the DC input voltage is lower than 995V, the inverter starts self-checking.
3. The full-load MPP voltage range of the inverter is the value measured under the rated AC voltage. If you have any questions, please consult local service personnel.

10.2 AC output data

Type	ASW25K-LT-G3	ASW27K-LT-G3	ASW30K-LT-G3
Rated output power	25000W	27000W	30000W
Max. output apparent power	27500VA	29700VA	33000VA
Rated AC Voltage (1)	3/N/PE,230/400V		
AC voltage range	180V-305V/312V-528V		
Rated AC Frequency (2)	50Hz/60Hz		
Operating range at AC power frequency 50 Hz	45Hz to 55Hz		
Operating range at AC power frequency 60 Hz	55Hz to 65Hz		
Max. continuous output current	39.9A	43.0A	47.8A
Maximum output current under fault conditions	110A		
Maximum output overcurrent protection	63A		
Adjustable displacement power factor	0.80 ind - 0.80 cap		
Inrush current (peak and duration)	<13A @250us		
Harmonic distortion (THD) at the rated power	< 3%		
Night-time power loss	<1 W		
Standby power loss	<12 W		
Overvoltage category in accordance with IEC60664-1	III		

Type	ASW33K-LT-G3	ASW36K-LT-G3	ASW40K-LT-G3
Rated output power	33000W	36000W	40000W
Max. output apparent power	36300VA	39600VA	44000VA
Rated AC Voltage (1)	3/N/PE ， 230/400V		
AC voltage range	180V-305V/312V-528V		
Rated AC Frequency (2)	50Hz/60Hz		
Operating range at AC power frequency 50 Hz	45Hz to 55Hz		
Operating range at AC power frequency 60 Hz	55Hz to 65Hz		
Max. continuous output current	52.6A	57.4A	63.8A
Maximum output current under fault conditions	135A		
Maximum output overcurrent protection	100A		
Adjustable displacement power factor	0.80 ind - 0.80 cap		
Inrush current (peak and duration)	<13A @250us		
Harmonic distortion (THD) at the rated power	< 3%		
Night-time power loss	<1 W		
Standby power loss	<12 W		
Overvoltage category in accordance with IEC60664-1	III		

1. The AC voltage range depends on the local safety standards and rules.
2. The AC frequency range depends on the local safety standards and rules.

10.3 General data

Type	ASW25K-LT-G3	ASW27K-LT-G3	ASW30K-LT-G3
Net weight	29Kg		
Dimensions(L×W×D)	543×520×235mm		
Mounting environment	Indoor and Outdoor		
Mounting recommendation	Wall bracket		
Operating temperature range	-25…+60℃		
Max. permissible value for relative humidity (non-condensing)	100%		
Max. operating altitude above mean sea level	3000m		
Ingress protection	IP66 according to IEC60529		
Climatic category	4K4H		
Protection class	I according to IEC 62103		
Topology	Transformerless		
Feed-in phases	3		
Cooling concept	Fan cooling		
Display	LED		
Communication interfaces	●/●/○/○ (RS485 /Wi-Fi/ LAN /4G)		
Radio technology	WLAN 802.11 b / g / n		
Radio spectrum	WLAN 2.4 GHz with 2412MHz – 2472MHz band		
Antenna gain	2dB		

● Standard features / ○ optional features

Type	ASW33K-LT-G3	ASW36K-LT-G3	ASW40K-LT-G3
Net weight	30Kg		
Dimensions(L×W×D)	463X543X225mm		
Mounting environment	Indoor and Outdoor		
Mounting recommendation	Wall bracket		
Operating temperature range	-25...+60℃		
Max. permissible value for relative humidity (non-condensing)	100%		
Max. operating altitude above mean sea level	3000m		
Ingress protection	IP66 according to IEC60529		
Climatic category	4K4H		
Protection class	I according to IEC 62103		
Topology	Transformerless		
Feed-in phases	3		
Cooling concept	Fan cooling		
Display	LED		
Communication interfaces	●/●/○/○ (RS485 /Wi-Fi/ LAN /4G)		
Radio technology	WLAN 802.11 b / g / n		
Radio spectrum	WLAN 2.4 GHz with 2412MHz – 2472MHz band		
Antenna gain	2dB		

● Standard features / ○ optional features

Type	ASW LT-G3 Series inverter
Internal overvoltage	Integrated
DC insulation monitoring	Integrated
DC injection monitoring	Integrated
Grid monitoring	Integrated
Residual current	Integrated
Islanding protection	Integrated (Three-phase monitoring)
EMC immunity	EN61000-6-1 EN61000-6-2
EMC emission	EN61000-6-3 EN61000-6-4
Utility interference	EN61000-3-11，EN61000-3-12

10.5 Tools and torque

Tools and torque required for installation and electrical connections.

Tools, model		Object	Torque
Torque screwdriver, SW10		Screws for wall bracket screws	3N.m
Hexagon screwdriver T3		Screws for AC terminal	2N.m
Torque screwdriver, PH2 Cross head		Screw for second protective grounding connection	2.5Nm
/		Stick	Hand-tight
RS485 sleeve	Open end of 29	Swivel nut of M28 cable gland	1.6 Nm
RS485 nut	Open end of 25	Swivel nut of M25 cable gland	1.2 Nm
AC connector nut	Open end of 50	Swivel nut of sunclix connector	10 Nm
Wire stripper		Peel cable jackets	/
Crimping tools		Crimp power cables	/
Hammer drill, drill bit of Ø10		Drill holes on the wall	/
Rubber mallet		Hammer wall plugs into holes	/
Cable cutter		Cut power cables	/
Multimeter		Check electrical connection	/
Marker		Mark the positions of drill holes	/
ESD glove		Wear ESD glove when opening the inverter	/
Safety goggle		Wear safety goggle during drilling holes.	/
Anti-dust respirator		Wear anti-dust respirator during drilling holes.	/

When the PV system does not operate normally, we recommend the following solutions for quick troubleshooting. If an error occurs, the red LED will light up. There will have “Event Messages" display in the monitor tools. The corresponding corrective measures are as follows:

Object	Error code	Corrective measures
Presumable Fault	E33	• Check the grid frequency and observe how often major fluctuations occur. • If this fault is caused by frequent fluctuations, try to modify the operating parameters after informing the grid operator first.
	E34	• Check the grid voltage and grid connection on inverter. • Check the grid voltage at the point of connection of inverter. • If the grid voltage is outside the permissible range due to local grid conditions, try to modify the values of the monitored operational limits after informing the electric utility company first. • If the grid voltage lies within the permitted range and this fault still occurs, please call service.
	E35	• Check the fuse and the triggering of the circuit breaker in the distribution box. • Check the grid voltage, grid usability. • Check the AC cable, grid connection on the inverter. • If this fault is still being shown, contact the service.
	E36	• Make sure the grounding connection of the inverter is reliable. • Make a visual inspection of all PV cables and modules. • If this fault is still shown, contact the service.
	E37	• Check the open-circuit voltages of the strings and make sure it is below the maximum DC input voltage of the inverter. • If the input voltage lies within the permitted range and the fault still occurs, please call service.

Presumable Fault	E38	• Check the PV array's insulation to ground and make sure that the insulation resistance to ground is greater than 1 MOhm. Otherwise, make a visual inspection of all PV cables and modules. • Make sure the grounding connection of the inverter is reliable. • If this fault occurs often, contact the service.
	E40	• Check whether the airflow to the heat sink is obstructed. • Check whether the ambient temperature around the inverter is too high.
	E46	• Check whether the open circuit voltage of each photovoltaic group is ≥1020V. • If the open circuit voltage of each pv group is less than 995V and this fault still exists, please contact the service personnel.
	E48	• Check whether the electric supply is abnormal. • If the electric supply is normal and this fault still exists, please contact the service personnel.
	E56 E57 E58	• Disconnect the inverter from the grid and the PV array and reconnect after 3 minutes. • If this fault is still being shown, contact the service.
	E61,62	• Check the DRED device communication or operation.
	E01,03 E05,07 E08,09 E10	• Disconnect the inverter from the utility grid and the PV array and reconnect it after LED turn off. • If this fault is still being displayed, contact the service.

Warning code	Warning message
31	PV1 input over voltage
32	PV2 input over voltage
34	PV1 input over current-software
35	PV1 input over current-hardware
36	PV2 input over current-software
37	PV2 input over current-hardware
40	BUS over voltage-software
42	BUS voltage unbalance (for three phase inverter)
44	Grid voltage over instant
45	Output over current-software
46	Output over current-hardware
47	Anti-islanding
150	PV1-SPD Fault
156	Inter Fan abnormal
157	External Fan abnormal
163	GFCI Redundancy check
165	Ground connect warning
166	CPU self-test --register abnormal
167	CPU self-test --RAM abnormal
174	Low Air Temperature

12 Maintenance

Normally, the inverter needs no maintenance or calibration. Regularly inspect the inverter and the cables for visible damage. Disconnect the inverter from all power sources before cleaning. Clean the housing, cover and display with a soft cloth. Ensure the heatsink at the rear of the inverter cover is not covered.

12.1 Cleaning the contacts of the DC-switch

Clean the contacts of the DC-switch once per year. Perform cleaning by cycling the switch to ON/OFF positions 5 times. The DC-switch is located at the lower left of the housing.

12.2 Cleaning the heat sink

⚠ CAUTION

Risk injury due to hot heat sink.

The heat sink may exceed 70℃ during operation.

- Do not touch the heatsink during operation.
- Wait approx. 30 minutes before cleaning until the heatsink has cooled down.

An external fan is installed at the bottom of the inverter. When the fan fails to work normally, the inverter cannot effectively dissipate heat, and the load drops or the machine may even shut down. At this time, the fan needs to be cleaned or replaced.

Clean the heat sink with pressurized air or a soft brush. Do not use aggressive chemicals, cleaning solvents or strong detergents.

For proper function and long service life, ensure free air circulation around the heatsink.

13 Recycling and disposal

Dispose of the packaging and replaced parts according to the rules at the installation site where the device is installed.

Do not dispose of the product together with the household waste but in accordance with the disposal regulations for electronic waste applicable at the installation site.

14 EU Declaration of Conformity

within the scope of the EU directives

- Electromagnetic compatibility 2014/30/EU(L 96/79-106, March 29,2014) (EMC).
- Low Voltage Directive 2014/35/EU(L 96/357-374, March 29, 2014)(LVD).
- Radio Equipment Directive 2014/53/EU(L 153/62-106. May 22. 2014) (RED).

AISWEI Technology Co., Ltd. confirms herewith that the inverters described in this manual are in compliance with the fundamental requirements and other relevant provisions of the above mentioned directives. The entire EU Declaration of Conformity can be found at www.solplanet.net.

15 Warranty

The factory warranty card is enclosed with the package, please keep well the factory warranty card. Warranty terms and conditions can be downloaded at http:// www.solplanet.net, if required.

When the customer needs warranty service during the warranty period, the customer must provide a copy of the invoice, factory warranty card, and ensure the type label of the inverter is legible. If these conditions are not met, Solplanet has the right to refuse to provide with the relevant warranty service.

16 Contact

If you have any technical problems concerning our products, please contact solplanet service.

We require the following information in order to provide you with the necessary assistance:

- Inverter device type
- Inverter serial number
- Type and number of connected PV modules
- Error code
- Mounting location
- Warranty card

EMEA

Service email: service.EMEA@solplanet.net

APAC

Service email: service.APAC@solplanet.net

LATAM

Service email: service.LATAM@solplanet.net

AISWEI Pty Ltd.

Hotline: +61 390 988 674

Add.: Level 40, 140 William Street, Melbourne VIC 3000, Australia

AISWEI B.V.

Hotline: +31 208 004 844 (Netherlands)

+48 134 926 109 (Poland)

Add.: Barbara Strozzilaan 101, 5e etage, kantoornummer 5.12, 1083HN Amsterdam, the Netherlands

AISWEI Technology Co., Ltd

Hotline: +86 400 801 9996

Add.: Room 904 - 905, No. 757 Mengzi Road, Huangpu District, Shanghai 200023

https://solplanet.net/contact-us/

Solplanet